PHOENIX® INTERNATIONAL

dryWIRE®

OPERATING INSTRUCTIONS

dryWIRE® Flux Cored Electrode Wire Stabilization Ovens

MODEL	PART #	DESCRIPTION *(All 50-60 Cycles)*	TEMP RANGE**	INSULATION	CHAMBER SIZE	CAPACITY	WEIGHT & DIMENSIONS
Type 4 Series Model							
dryWIRE®	1205438	120/240V AC* @ 1000 watts with installed thermometer	100˚ to 300˚F (38˚ to 150˚C) +/-25˚F (14˚C) Adjustable Thermostat Control with Indicator Light	2" fiberglass	14.5" x 17" x 18"	Up to four 12" or three 16" spools or coils	90 lb 22" x 23.75" x 25"

**Operation on Direct Current (DC) will damage oven and void warranty.*
***Average stabilized temperature @ 70˚F ambient temperature.*

MADE IN THE USA

Phoenix International, Inc.

8711 West Port Avenue • Milwaukee, WI 53224 USA • Telephone: 414-973-3400 • Fax: 414-973-3275

www.phx-international.com

N5610292A

OVEN DESCRIPTION

WIRING

dryWIRE® ovens are designed for AC single phase power only. *Note: dryWIRE® ovens are factory wired for 120 volts and can be rewired for 240 volts. Refer to wiring diagram.*

GUIDE TO STORAGE

Once flux cored wire is removed from its initial packaging, the unused portion should be stored in a dryWIRE® oven not to exceed 300°F (150°C) for coils or wire baskets, 250°F (121°C) for fiberboard spools or 150°F (65°C) for plastic spools. Never store wire in its original plastic bag. Precise temperatures for wire storage and reconditioning should be obtained from the wire manufacturers' technical department.

Note: Temperatures exceeding this will damage the spool and render the wire un-usable.

Reconditioning flux cored wire exhibiting weld metal porosity or "worm tracks" due to moisture absorption by the flux can be reconditioned by rebaking the wire.

The exact time and temperature for rebake are determined by the wire and the spool material. Wire coils, masonite spools or wire baskets are typically rebaked in a range of 230°F - 300°F (110°C - 149°C) for a minimum of 6 to 12 hours. Wire on plastic spools cannot be rebaked because of the inability of the plastic to withstand high temperature. Precise temperatures for wire storage and reconditioning should be obtained from the wire manufacturers' technical department.

Another important factor in the storing and rebaking of flux cored wire is the lubricant on the outside of the wire. Some lubricants can be damaged by high temperature. Contact the wire manufacturer for possible damage.

VENTING

For normal holding operation set easily adjusted vent on the door about 1/4 open.

TEMPERATURE SETTING

The dryWIRE® oven temperature range is 100°F (38°C) to 300°F (150°C). The thermostat dial is calibrated from 32°F (0°C) to 300°F (150°C). Required oven temperature setting is obtained by rotation of dial to line up desired temperature with indicator light.

The indicator light illuminates only when voltage is being applied to the heating elements. Momentary rotation past desired temperature setting may be necessary to activate the indicator light in order to locate it for indexing purposes.

Thermostat is accurate to +/-15°F (8°C) at the sensing bulb, however, temperature may vary slightly at different areas in the oven chamber since this is a convection type oven.

TEMPERATURE INDICATION

dryWIRE® Type 4 ovens are supplied with a battery powered digital thermometer to indicate the actual temperature inside oven in either °F or °C.

The thermometers are supplied in °F mode. Conversion to °C mode is accomplished by pressing the button located in the battery holder. This will cycle between °F and °C. Thermometers are powered by one AA battery.

Replacement of the battery is also covered in the troubleshooting section of this manual.

WARNING

Excess Heat: At maximum setting, the actual temperature in portions of the oven near the heating elements may reach approximately 400°F (204°C). Temperatures over 400°F (204°C) are not recommended. They may cause oven damage and/or unacceptably high exterior surface temperatures.

REPAIR: SPARE PARTS

Enclosed within these instructions are wiring diagrams and a repair parts list for your oven. For critical welding operations requiring continuous holding we would suggest carrying all the parts listed in the ***Suggested Spare Parts*** section in this manual.

AMP DRAW

120V = 8.5 amps
240V = 4.2 amps

BEFORE PLACING OVEN IN SERVICE:

1. Run oven at 300°F (150°C) for two hours with the vent hole fully open and the oven door slightly open. This will help purge the oven of any contaminates.
2. Contact the wire manufacturer regarding the appropriate temperatures for holding the spools of wire, specifically plastic spools.
3. If using plastic spools in the dryWIRE® oven, test a few spools in the oven at the manufacturer's recommended temperature. If warping or core distortion occurs, turn temperature down 10°F (5°C) and retest. If neccessary, continue testing.

WIRING DIAGRAMS

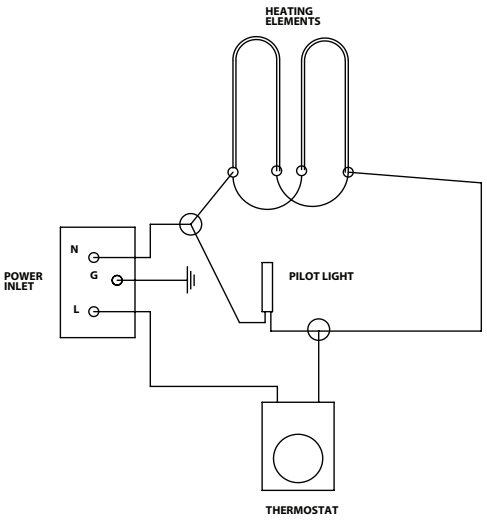

WIRING DIAGRAM FOR:
Type 4 Series 120V

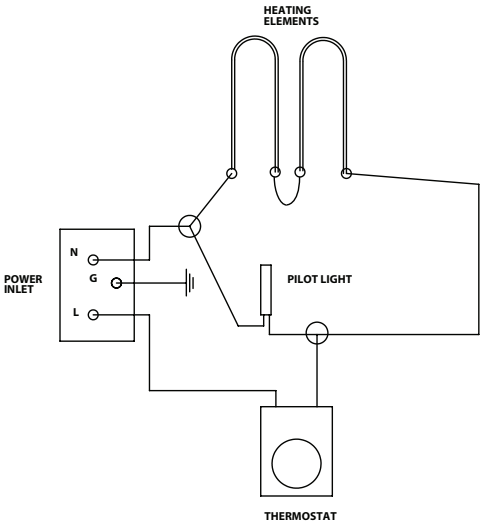

WIRING DIAGRAM FOR:
Type 4 Series 240V

CAUTION:

All wiring should be done by licensed electricians in accordance with state and local codes, as well as the NEC (National Electrical Code) Standards. Improper installation or use may result in serious injury. Always remove oven from power source before troubleshooting or repairing.

TROUBLESHOOTING

OVEN FAILS TO OPERATE: NO HEAT/OVERHEATS

1. If oven indicator light will not illuminate, check power supply.

2. Check indicator light for continuity. If defective, replace indicator light.

3. Check thermostat on front. If indicator light illuminates, power is being supplied through thermostat to dual heating elements. Turn knob from low to high setting and return. Definite "snap" should be heard at low temperature end and indicator light should turn off and on with each "snap" cycle. If "snap" is not heard and indicator light fails to operate, replace entire themostat. (See Replacement Parts section in this manual.)

4. If thermostat operates satisfactorily, check continuity of heating elements at bottom of oven. (Access through removable lower panels.) Failure of one element will prevent oven operation on 240 volts. If operating on 120 volts failures of one element will cause very slow heating. If defective, remove oven from power source and replace both elements.

THERMOMETER INDICATES IN WRONG UNITS: ˚F OR ˚C

1. Disconnect power from the unit.
2. Remove the cover near the base on the left hand side of the oven to expose thermometer battery housing.
3. Changing to either °F or °C is accomplished by pressing the button located in the battery holder.
4. Re-install the battery and cover prior to putting the oven back in service.

THERMOMETER INOPERABLE: REPLACE BATTERY

Indicated by an incomplete or absent display.

1. Disconnect power from the unit.
2. Remove the cover near the base on the left hand side of the oven.
3. Remove the battery from the holder and replace with a fresh AA 1.5V battery. (Alkaline batteries are recommended.)
4. Re-install the battery and cover prior to putting the oven back in service.

NOTE:

When replacing heating elements, always replace both elements. Pairing of one new element with an old element will cause rapid failure of old element.

SUGGESTED SPARE PARTS

For normal daily operation, the following spare parts and quantities are recommended to have inventoried for every 10 units of dryWIRE® Ovens in use.

SUGGESTED SPARE PART	QUANTITY PER 10 OVENS	PART #
Heating Element Kit	1	1257095
Thermostat Kit	1	1257085
Door Latch & Strike	1	1252200
120V North American Power Cord	1	1257540

NOTE:

For users of large oven quantities, or users not in North America, we recommend keeping an inventory of additional spare parts to support day to day operation.

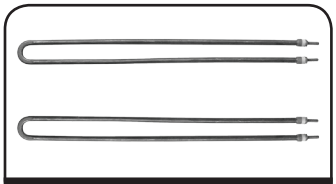

HEATING ELEMENT KIT

DOOR LATCH & STRIKE

NORTH AMERICAN POWER CORD

CHECKING THERMOSTAT CALIBRATION

Each thermostat is adjusted at the factory and calibrated on precision instruments to control temperatures accurately. Adjustment or re-calibration is not needed unless the thermostat has been mishandled in transit or changed or abused while in service.

To Check Calibration:

1. Use a good grade mercury thermometer to check temperature. For griddle control, use a disc type thermocouple. Drop a couple drops of oil on griddle surface plate and place thermocouple disc flat into the oil.
2. Turn the dial of the thermostat to 300˚ mark.
3. Allow enough time for temperature to stabilize or until several temperature readings are identical.

ADDITIONAL PRODUCTS AVAILABLE

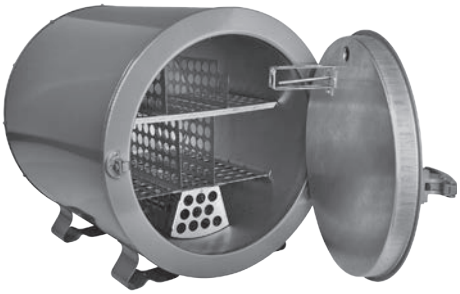

Type 300 Series
Stationary Electrode Oven

Type 5 Series
Portable Electrode Oven

Safetube® 40 Inch TIG Rod
Canister

Phoenix International, Inc.

8711 West Port Avenue • Milwaukee, WI 53224 USA • Telephone: 414-973-3400 • Fax: 414-973-3275 www.phx-international.com

ORDERING INFORMATION

To order spare or replacement parts please visit our website: *www.phx-international.com*.
When ordering, please confirm that you are ordering parts for the correct oven.

#	DESCRIPTION	QTY	PART #
3	Door Latch and Strike	1	1252200
4	Vent Cover Kit	1	1257152
	Hinge Kit (2 hinges)	1	1250206
	120V North American Power Cord	1	1257540
2	Indicator Light		1257402
	Thermostat Kit		1257085
	Thermostat	1	
	Thermostat Knob	1	
5	***North American Locking Power Connection Kit***		1257395
	Rivet	1	
	Locking Power Inlet	1	
	120V North American Locking Cord	1	
6	***Heating Element Kit***		1257095
	Element	2	
	Shelving Kit		1255150
	Shelving Assembly	1	
	Gasket Kit		1257163
	Gasket (per foot)	8	
	Power Inlet Kit		1257390
	Rivet	1	
	Locking Power Inlet	1	
1	***Thermometer Kit***		1257420
	Digital Thermometer	1	
	Screw	2	
	Clamp	1	

3 Door Latch & Strike

5 North American Locking Power Connection Kit

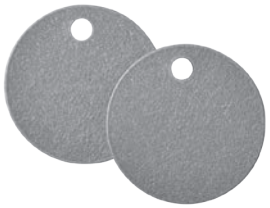

4 Vent Cover Kit

2 Indicator Light

6 Heating Element Kit

1 Thermometer Kit

GUIDE TO ELECTRODE & FLUX STABILIZATION

Eliminate expensive rework and protect welding profits!

- Recondition/rebake procedures for electrode coatings exposed to moisture are included.
- Remove electrodes from cardboard containers before placing in ovens.
- Electrode coatings should not be exposed to the re-baking temperature without first being reconditioned at a lower temperature. Failure to do so may result in breakdown of electrode coatings. After re-baking, lower temperature to holding level until reissued.

AWS (TYPE)	Air Conditioned Storage Before Opening (RH=Relative Humidity)	DryRod Oven Holding Temp After Opening	After Exposure to Moisture, Sufficient Amount of Time to Affect Weld Quality	
			Recondition Step #1	Rebake Step #2
Cellulose EXX10, EX11, EXX20	70˚–120˚F (21˚–49˚C) 50% Max RH	100˚–120˚F (38˚–49˚C)	Not Recommended	Not Recommended
Titania EXX12, EX13, EXX14	70˚–120˚F (21˚–49˚C) 50% Max RH	100˚–120˚F (38˚–49˚C)	180˚–230˚F (82˚–110˚C) ½ Hour	250˚–300˚F (121˚–149˚C) 1 Hour
Iron Powder M.S. EXX24, EX27	70˚–120˚F (21˚–49˚C) 50% Max RH	100˚–120˚F (38˚–49˚C)	180˚–230˚F (82˚–110˚C) ½ Hour	400˚–500˚F (204˚–260˚C) ½ Hour
Iron Powder Low Hydrogen EXX18, EX28 ***Low Hydrogen*** EXX15, EX16 ***Low Hydrogen High Tensile*** EXXX15, EXX16, EXXX18	70˚–120˚F (21˚–49˚C) 50% Max RH	250˚–300˚F (121˚–149˚C)	180˚–220˚F (82˚–104˚C) 1½ Hour	650˚–750˚F (343˚–399˚C) 1 Hour
Stainless EXXX-15, EXXX-16	40˚–120˚F (4.5˚–49˚C) 60% (+/-10) Max RH	250˚–300˚F (121˚–149˚C)	180˚–220˚F (82˚–104˚C) 1½ Hour	500˚–600˚F (260˚–316˚C) 1 Hour
Inconnel Monel Kickel Hard-Surfacing	40˚–120˚F (4.5˚–49˚C) 60% (+/-10) Max RH	150˚–200˚F (66˚–93˚C)	180˚–230˚F (82˚–110˚C) ½ Hour	Not Recommended
Brasses Bronzes	40˚–120˚F (4.5˚–49˚C) 60% (+/-10) Max RH	150˚–200˚F (66˚–93˚C)	Not Recommended	Not Recommended
Granulated Flux Agglomerated Flux	40˚–120˚F (4.5˚–49˚C) 60% (+/-10) Max RH	100˚–200˚F (38˚–93˚C)	Contact Manufacturer for Specific Temperatures	
Flux Cored Wire EXXT-1, EXXT-2, EXXT-5, EXXT-G	40˚–120˚F (4.5˚–49˚C) 60% (+/-10) Max RH	250˚–300˚F (121˚–149˚C)	Contact Manufacturer for Specific Temperatures	

NOTE: Proper redrying temperatures depend upon the electrode type and its condition. Contact your electrode manufacturer for specific instructions involving critical operations. Phoenix International, Inc. does not accept liability for damage to electrodes and/or welded products resulting from the use of this table. Temperatures and times shown are recommended and are not guaranteed to be correct.

The Guide to Electrode & Flux Stabilization

is also available as a laminated card and poster.

Please visit ***www.phx-international.com*** or email ***info@phx-international.com*** to receive yours **FREE!**

WARRANTY

Phoenix International, Inc. warrants its products against defects in material and workmanship. The company will, at its discretion, repair or replace any properly installed Phoenix International manufactured product which fails under normal operating conditions within one year from date of receipt. Contact the factory for return authorization before returning the product to Phoenix International freight prepaid. If our inspection confirms that the product is defective under terms of this warranty, it will be repaired/replaced and returned freight prepaid.

This warranty applies only to products sold by Phoenix International, Inc. and specifically excludes installation or de-installation labor, transportation or equipment of another manufacturer used in conjunction with Phoenix International products. No other warranty, expressed or implied, exists beyond this warranty declaration.

Phoenix constantly strives to improve its products and therefore reserves the right to change design, materials and specifications without notice.

PHOENIX® INTERNATIONAL

Phoenix International, Inc.

8711 West Port Avenue • Milwaukee, WI 53224 USA • Telephone: 414-973-3400 • Fax: 414-973-3275

www.**phx-international**.com